NOVA Energy & Automation

Product Specifications

80A Main Power Distribution Panel

Model NEA080RT

03 January 2012

Product Description

1. Standard Applications

The Nova NEA080RT system Main Disconnect Panel (MDP) serves as the main facility power disconnect source installed ahead of the X-ray equipment. Each MDP is sold with 2 remote Emergency stop Buttons. The MDP saves time, installation labor, and valuable mounting space by consolidating the main circuit breaker and the feeder over current devises into one integrated panel. The panel design includes short circuit, overload and emergency shutdown of the system. All power is controlled by an ADA approved through the door disconnect or by the remote emergency operator control station.

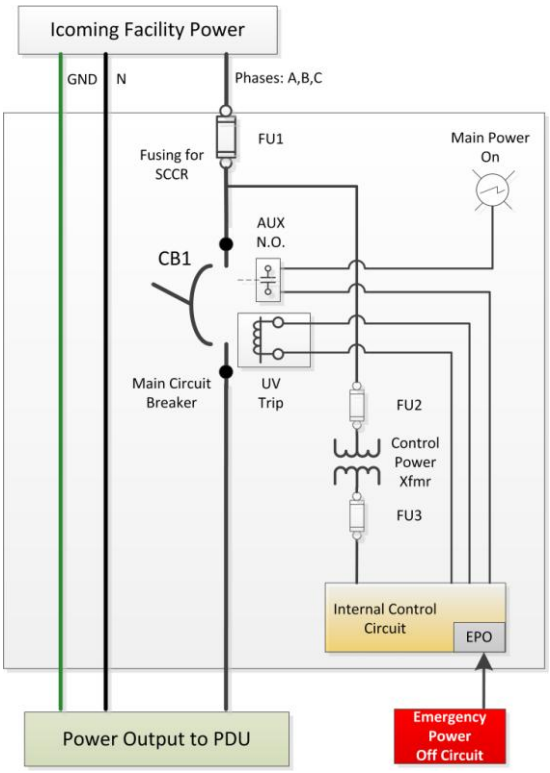

Figure 1 Nova X-ray Main Disconnect Application Diagram

2. Application of Undervoltage Release

The Under voltage release mechanism trips the circuit breaker by removing power from an internal coil. To energize a circuit breaker with a UVR mechanism, power must be present and applied to the UVR coil before the circuit breaker can be energized. If power is not provided to the UVR coil the breaker will continue to trip while one attempts to turn it on. UVR coils are designed to trip when its applied voltage falls between 35 to 70% of nominal rating.

UVR mechanism are best suited to "interlocking" a number of other equipment safety checks, as all circuits would need to be satisfied and all normally closed contacts would be wired in series. Any one of the contacts could open thereby tripping the circuit breaker.

Another benefit of the UVR is that it will not automatically restart the equipment after a power outage. It would require that a person would go to the breaker panel and manually energize it after checking to see that conditions are safe to do so.

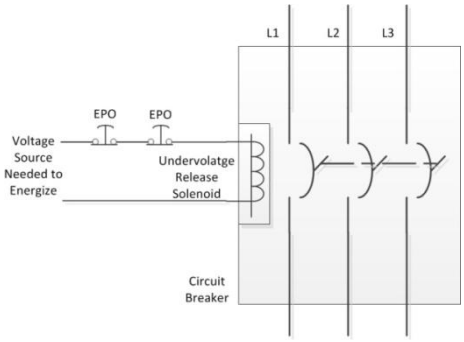

Figure 2 Undervoltage Release Diagram

3. System Compatibility

The Nova NEA080RT is compatible with the following medical imaging equipment:

GE Healthcare Radiography and Flouroscopy (R&F) models: Precision 500D and several other similar installations.

GE Healthcare Radiography models: Discovery XR 656, Discovery XR 650, Optima XR 640, Brivo, Definium 5000, Silhouette, Proteus, and several other similar installations.

4. Identification

GE Healthcare- The proper panel can be identified on GE Healthcare Drawings:

Sheet E1➔ Right Column ➔ Junction Point Descriptions ➔ A, A1, or MDP ➔ Main Disconnect: Equal to E4502ST

5. Features/ Benefits

Features

- UL and cUL listed to conform to NEC
- Labeled to conform with NFPA99, NFPA-70, NEC 100, NEC 110-3, NEC 660.5
- Provides over current and short circuit protections
- Short circuit current rated at 25kAIC
- Undervoltage Circuit protection
- Single point main disconnect and termination point

- American Disabilities Act (ADA) approved through the door disconnect handle provides one hand ON/OFF operation. The ADA handle makes turning the imaging equipment on and off during emergencies or power failures easy for technicians and nursing staff.
- Lock Out/ Tag Out lockable operating handle provides added safety during maintenance and OSHA requirements.
- Interlocked ON/OFF hinged door prevents access to the panel while the disconnect is in the ON position.
- Door may be locked closed with customer provided padlock.
- ¼ turn slotted door latch provides additional security.
- Isolated Neutral lugs
- Oversized ground lugs for parity sizing of ground wire
- Compact size for easy installation
- Thermal protection
- Factory wired to match GE equipment and tested
- Manufactured in the USA

Benefits

- Designed, tested, and installed on hundreds of projects worldwide
- Acceptable low cost alternative to GE
- Manufactured using the highest quality components for high reliability and long life
- Provides protection for sensitive electronic equipment
- Manufactured to a tolerance which exceeds the specifications of Elekta equipment.
- Easy to view LED indicator lights for System ON
- Field adjustable overload and instantaneous trip
- Reduced weight- all components are within a small 45lb enclosure
- Reduces installation time and cost by eliminating delays in obtaining individually enclosed components and by eliminating on site assembly
- Provides a standardized platform for other future modifications or upgrades

Figure 2 Nova 80A Main Disconnect Panel

6. Specifications

Model	NEA080RT
Application	Main Disconnect Panel for X-ray installation
Input Voltage	480VAC (please specify if other voltage is required)
Output Voltage	480VAC (please specify if other voltage is required)
Control Voltage	Internally derived 120VAC for controls
Emergency Power Off Controls	120VAC Undervoltage release (N.O)
Operators Controls	Compatible with EPO and Remote Start
Compatible Estop Buttons	Normally closed contacts GE X-ray: 2 ESTOPS- 1 N.O, 1 N.C. contacts
Grounding	Isolated and non isolated ground bar
Overload Current Protection	Factory set to 80A, (please specify if other current rating is required)
Short Circuit Current Protection	25 kAIC
Instantaneous Trip Settings	Field adjustable from 1 - 10x of over current rating
Approvals	UL/cUL

7. Weights and Dimensions

Mounting	Main disconnect is provided in a steel enclosure suitable for surface or semi flush installations.
Dimensions	Height: 23.62” (600mm) Width:15.7” (400mm) Depth: 5.9” (150mm)
Weight	45 lbs. (20.45 kg)
Mounting	Rear wall mounting holes (4). Spaced 0.79” (20mm) from enclosure edge. Optional mounting brackets are available

Enclosure	16 Gauge Carbon Steel, all rounded corners 1 gland plate in the enclosure base.
Enclosure Sealing	Foamed-in place polyurethane door gasket
Finish	Dip coat primed, powder coated in textured RAL 7035
Latching Mechanism	Two ¼ turn latches with double-bit inserts (cam lock). Door is hinged on the left side but can be swapped if specified when order is placed.
Interior Panel	Zinc-Plated subpanel
Protection Category	IP 66 to EN60 529/09:2000, complies with NEMA 4 Enclosure Approvals: UL, CSA, TUV, GL, Lloyds, VDE, Bureau Veritas

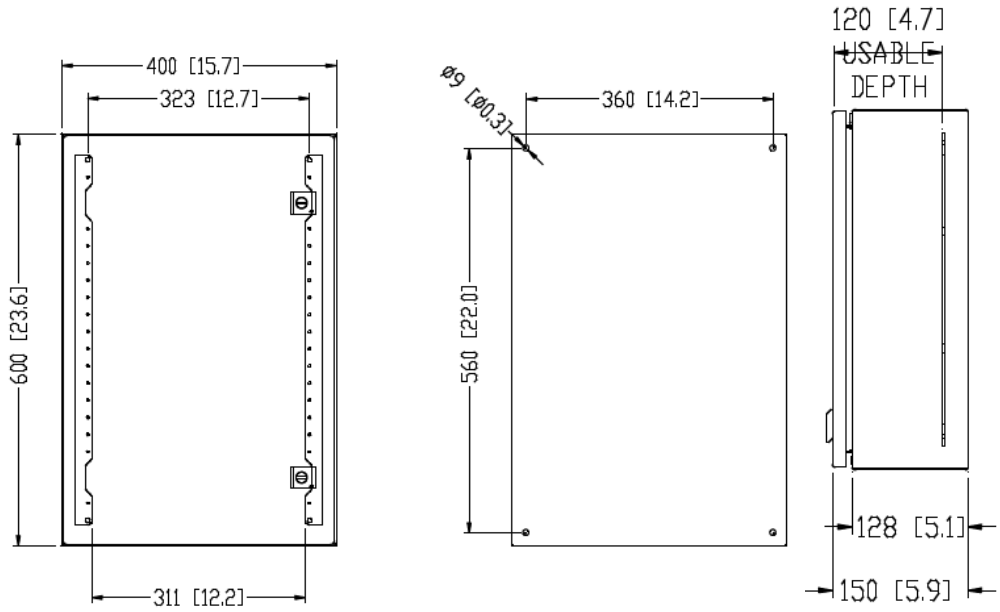

Figure 2 Enclosure Dimensions: Outside, Mounting, Depth

8. Warranty

This limited warranty set forth below is given by Nova Automation ("Seller") with respect to the electrical equipment ("Product") packaged with this limited warranty. The Product, when delivered to you in new condition in its original packaging, is warranted against defects in materials or workmanship as follows: For a period of one (1) year from the date of original purchase, defective parts or a defective Product returned to a Seller, or its authorized service providers, as applicable, and proven to be defective upon inspection, will be repaired, or exchanged for a new Product, as determined by the Seller, or the authorized service provider.

This limited warranty covers all defects encountered in normal use of the Product, and does not apply in the following cases: Loss of or damage to the Product due to abuse, mishandling, alteration, accident, electrical current fluctuations, failure to follow operating, maintenance or environmental instructions prescribed by Seller, failure to follow Sellers installation instructions, or service performed by someone other than Seller or its authorized service provider.

Nova assumes no responsibility for labor or freight costs incurred in connection with the installation, removal, or replacement of products determined to be defective or any consequential or incidental damages arising from the use of the product. Nova Automations entire liability on any claim of loss or damage resulting from a defective product is limited to the replacement of the product.

WARRANTY IS VOID IF PRODUCT IS NOT USED FOR THE PURPOSE FOR WHICH IT WAS MANUFACTURED.

9. Product Service and Technical Assistance

Nova Automation, LLC
2722 N. Avondale Blvd
Milwaukee WI 53210
PH# 262-309-2950
Website: www.NovaAutomation.net

10. Approvals

Prepared By _____

([**Job Title**])

This document requires the following approvals

Approved By _____

([**Job Title**])

_____

([**Job Title**])

Approval Date _____